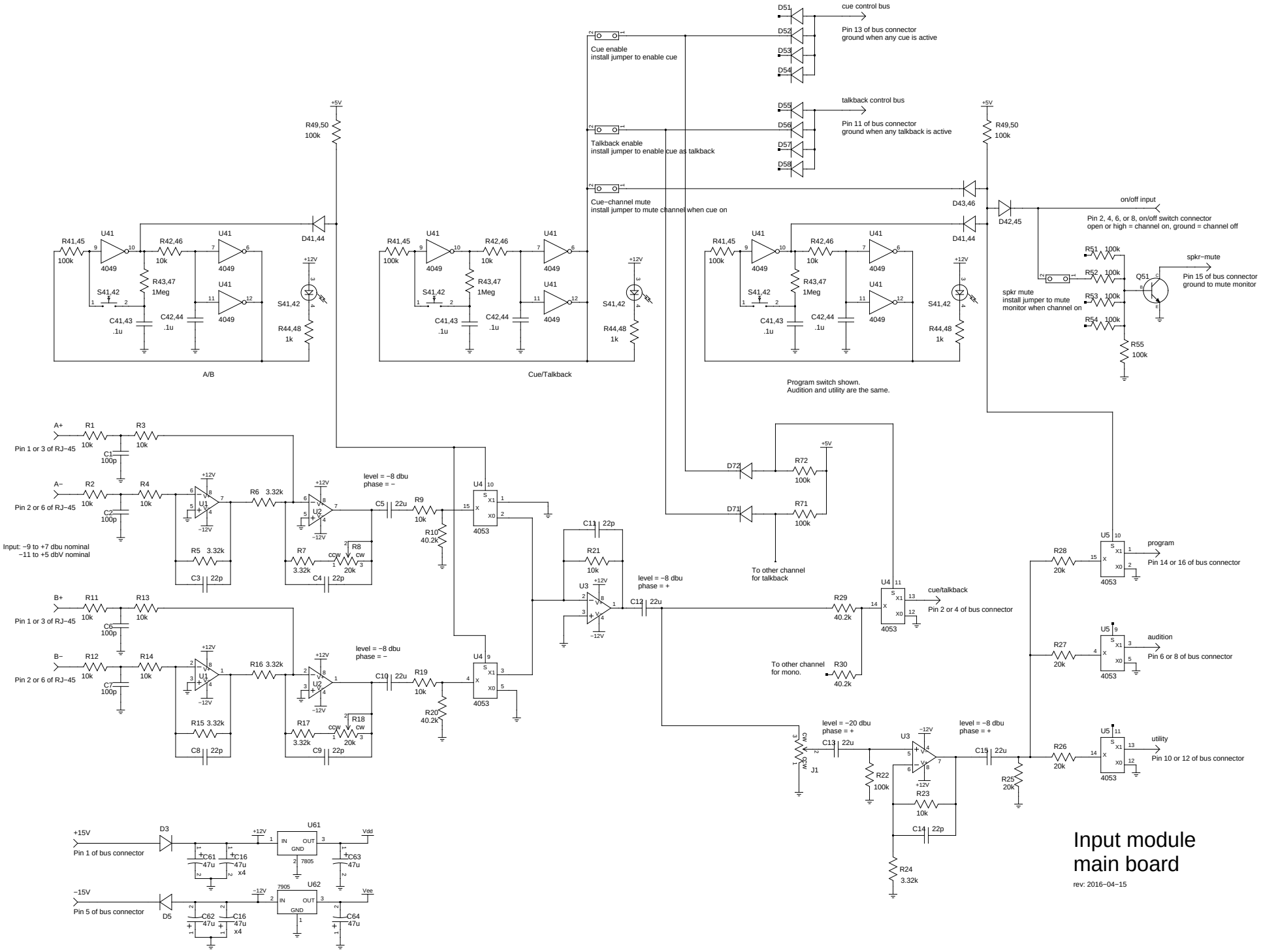
cue control bus
Pin 13 of bus connector
ground when any cue is active
Cue enable
install jumper to enable cue
talkback control bus
Pin 11 of bus connector
ground when any talkback is active
Talkback enable
install jumper to enable cue as talkback
Cue−channel mute
install jumper to mute channel when cue on
on/off input
Pin 2, 4, 6, or 8, on/off switch connector
open or high = channel on, ground = channel off
spkr−mute
Pin 15 of bus connector
ground to mute monitor
spkr mute
install jumper to mute
monitor when channel on
A/B
Cue/Talkback
Program switch shown.
Audition and utility are the same.
Pin 1 or 3 of RJ−45
Pin 2 or 6 of RJ−45
Input: −9 to +7 dbu nominal
−11 to +5 dbV nominal
level = −8 dbu
phase = −
level = −8 dbu
phase = +
level = −20 dbu
phase = +
To other channel
for talkback
To other channel
for mono.
cue/talkback
Pin 2 or 4 of bus connector
program
Pin 14 or 16 of bus connector
audition
Pin 6 or 8 of bus connector
utility
Pin 10 or 12 of bus connector
+15V
Pin 1 of bus connector
−15V
Pin 5 of bus connector
Vdd
Vee
Input module
main board
rev: 2016−04−15